DE LA FONTAINE

INSWING SINGLE GLAZED STEEL DOOR (HVHZ)(IMPACT)

GENERAL NOTES:

1. THE PRODUCT SHOWN HEREIN IS DESIGNED AND MANUFACTURED TO COMPLY WITH THE CURRENT EDITION FLORIDA BUILDING CODE (FBC), INCLUDING HVHZ AND HAS BEEN EVALUATED ACCORDING TO THE FOLLOWING:
   - TAS 201-94
   - TAS 202-94
   - TAS 203-94
   - ASTM E283-04(12)
   - ASTM E330-14(21)
   - ASTM E1886-19
   - ASTM E1996-17

2. ADEQUACY OF THE EXISTING STRUCTURAL CONCRETE/MASONRY AND 2X FRAMING AS A MAIN WIND FORCE RESISTING SYSTEM CAPABLE OF WITHSTANDING AND TRANSFERRING APPLIED PRODUCT LOADS TO THE FOUNDATION IS THE RESPONSIBILITY OF THE ENGINEER OR ARCHITECT OF RECORD FOR THE PROJECT OF INSTALLATION.

3. 1X AND 2X BUCKS (WHEN USED) SHALL BE DESIGNED AND ANCHORED TO PROPERLY TRANSFER ALL LOADS TO THE STRUCTURE. BUCK DESIGN AND ANCHOR LAYOUT IS THE RESPONSIBILITY OF THE ENGINEER OR ARCHITECT OF RECORD FOR THE PROJECT OF INSTALLATION.

4. THE INSTALLATION DETAILS DESCRIBED HEREIN ARE GENERIC AND MAY NOT REFLECT ACTUAL CONDITIONS FOR A SPECIFIC SITE. IF SITE CONDITIONS CAUSE INSTALLATION TO DEVIATE FROM THE REQUIREMENTS DETAILED HEREIN, A LICENSED ENGINEER OR ARCHITECT SHALL PREPARE SITE SPECIFIC DOCUMENTS FOR USE WITH THIS DOCUMENT.

5. THIS PRODUCT IS LARGE AND SMALL MISSILE IMPACT RESISTANT APPROVED IMPACT PROTECTIVE SYSTEM **IS NOT REQUIRED** ON THIS PRODUCT IN AREAS REQUIRING IMPACT RESISTANCE.

TABLE OF CONTENTS

SHEET	SHEET DESCRIPTION
1	GENERAL & CONSTRUCTION NOTES
2	GLAZING DETAIL & ANCHOR LAYOUT
3	ELEVATIONS
4	ANCHOR LAYOUTS & NOTES
5	VERTICAL SECTIONS
6	HORIZONTAL SECTIONS
7	INSTALLATION DETAILS - COMBINATION AND Z ANCHORS
8	INSTALLATION DETAILS - EWA ANCHORS
9	INSTALLATION DETAILS - WIRE/T MASONRY & JAMB BASE ANCHORS
10	INSTALLATION DETAILS & NOTES
11	GASKETING DETAILS FOR AIR INFILTRATION
12	THRESHOLD DETAIL & ANCHOR LAYOUT
13	CORNER CONSTRUCTION
14	REINFORCEMENTS
15	REINFORCEMENTS
16	BILL OF MATERIAL

CONSTRUCTION NOTES:

1. DOOR CONSTRUCTION:
   - 1.1. PANEL MATERIAL: 18 GA. A40/A60/G90 GALV. STEEL MIN. (0.042" MIN.)
   - 1.2. OVERALL PANEL THICKNESS: MIN. 1 3/4 INCH TO MAX. 2 1/4 INCH
   - 1.3. DOOR CORES:
     - 1.3.1. HONEYCOMB
     - 1.3.2. POLYSTYRENE
     - 1.3.3. POLYURETHANE
     - 1.3.4. STEEL STIFFENED (POLYSTYRENE OR POLYURETHANE)
   - 1.4. EDGE SEAMS:
     - 1.4.1. STANDARD LOCK WELDED AT THE TOP AND BOTTOM.
     - 1.4.3. STANDARD LOCK WITH EPOXY FILLED AND GRINDED SMOOTH SEAM
     - 1.4.4. CONTINUOUS WELD LOCK SEAM
   - 1.5. TWO (2) TOP AND ONE (1) BOTTOM CHANNELS ARE 16 GA. STEEL AND ARE SPOT WELDED TO EACH FACE SHEET 3" O.C.
   - 1.6. HINGES:
     - 1.6.1. HAGER BB1191
     - 1.6.2. HAGER BB1168
     - 1.6.3. HAGER BB1199
     - 1.6.4. HAGER BB1279
     - 1.6.5. HAGER 780-112 ROTON
   - 1.7. HINGE REINFORCEMENTS ARE LOCATED AT EACH HINGE LOCATION.
   - 1.8. LOCK REINFORCEMENTS ARE USED WHEN APPLICABLE.

2. FRAME CONSTRUCTION:
   - 2.1. FRAME MATERIAL: 16 GA. A40/A60/G90 GALV. STEEL MIN. (0.054" MIN.)
   - 2.2. FRAME DEPTH: 5.75" MIN. (DOUBLE RETURNS QUALIFIED)
   - 2.3. CORNER CONSTRUCTION:
     - 2.3.1. KNOCK-DOWN
     - 2.3.2. FACE WELD
     - 2.3.3. FULL WELD
   - 2.4. HINGE REINFORCEMENT IS LOCATED AT EACH HINGE LOCATION.
   - 2.5. LOCK STRIKE REINFORCEMENTS ARE USED WHEN APPLICABLE.

FLORIDA BUILDING CODE DESIGN PRESSURES

CONFIGURATION	LATCHING HARDWARE TYPE	LATCHING HARDWARE SERIES	*WHERE WATER INFILTRATION IS NOT REQUIRED OR IS PROTECTED BY OVERHANG	WHERE WATER INFILTRATION REQUIREMENT IS NEEDED OR IS NOT PROTECTED BY OVERHANG	MISSILE IMPACT RATING
SINGLE	CYLINDRICAL LOCKSET	SCHLAGE D/ND	+/- 70 PSF	-	LARGE AND SMALL MISSILE IMPACT RATED
		SARGENT 11	+/- 70 PSF		
	MORTISE LOCKSET WITH DEADBOLT	SCHLAGE L9000	+/- 70 PSF		
		SARGENT 8200	+/- 70 PSF		

*NOTE: UNIT SHALL BE INSTALLED IN NON-HABITABLE LOCATIONS OR AT LOCATION PROTECTED BY OVERHANG SUCH THAT OVERHANG RATIO (OH) = OH LENGTH /OH HEIGHT GREATER THAN 1.

DE LA FONTAINE
STEEL DOORS AND FRAMES

4115 BRODEUR STREET
SHERBROOKE, QC J1L1K4
PH: (819) 821-9230 FX: (819) 569-5928

TITLE: INSWING SINGLE GLAZED STEEL DOOR (HVHZ) (IMPACT)

GENERAL & CONSTRUCTION NOTES

PREPARED BY: BUILDING DROPS, INC.
1900 NE MIAMI COURT, STE 2-15
MIAMI, FL 33132
PH: (954)399-8478
FAX: (954)744.4738
WEB: www.buildingdrops.com

REMARKS	BY	DATE

THE INSTALLATION DETAILS DESCRIBED HEREIN ARE GENERIC AND MAY NOT REFLECT ACTUAL CONDITIONS FOR A SPECIFIC SITE. IF SITE CONDITIONS CAUSE INSTALLATION TO DEVIATE FROM THE REQUIREMENTS DETAILED HEREIN, A LICENSED ENGINEER OR ARCHITECT SHALL PREPARE SITE SPECIFIC DOCUMENTS FOR USE WITH THIS DOCUMENT.

Digitally signed by Hermes F. Norero, P.E.
Reason: I am approving this document
Date: 2024.06.20 11:59:00 -04'00'

HERMES F. NORERO LICENSE No. 73778 STATE OF FLORIDA PROFESSIONAL ENGINEER

HERMES F. NORERO, P.E.
LICENSED PROFESSIONAL ENGINEER
BUILDING DROPS INC
1900 NE MIAMI COURT # 2-15
MIAMI, FL 33132
FBPE CERT. OF AUTHORIZATION No. 29578

FL46851

DATE: 06.20.24

DWG. BY: DI CHK. BY: HFN

SCALE: NTS

DWG. #: DLF005

SHEET: 1 OF 16

6/21/2024 4:04 PM
c:\users\dilenwata\building drops, inc\building drops landing - common\projects\de la fontaine\fbc-22-0614.1 - fbc submittal - hollow metal swing door is-os\dwgs\inswing glazed\dlf005.dwg

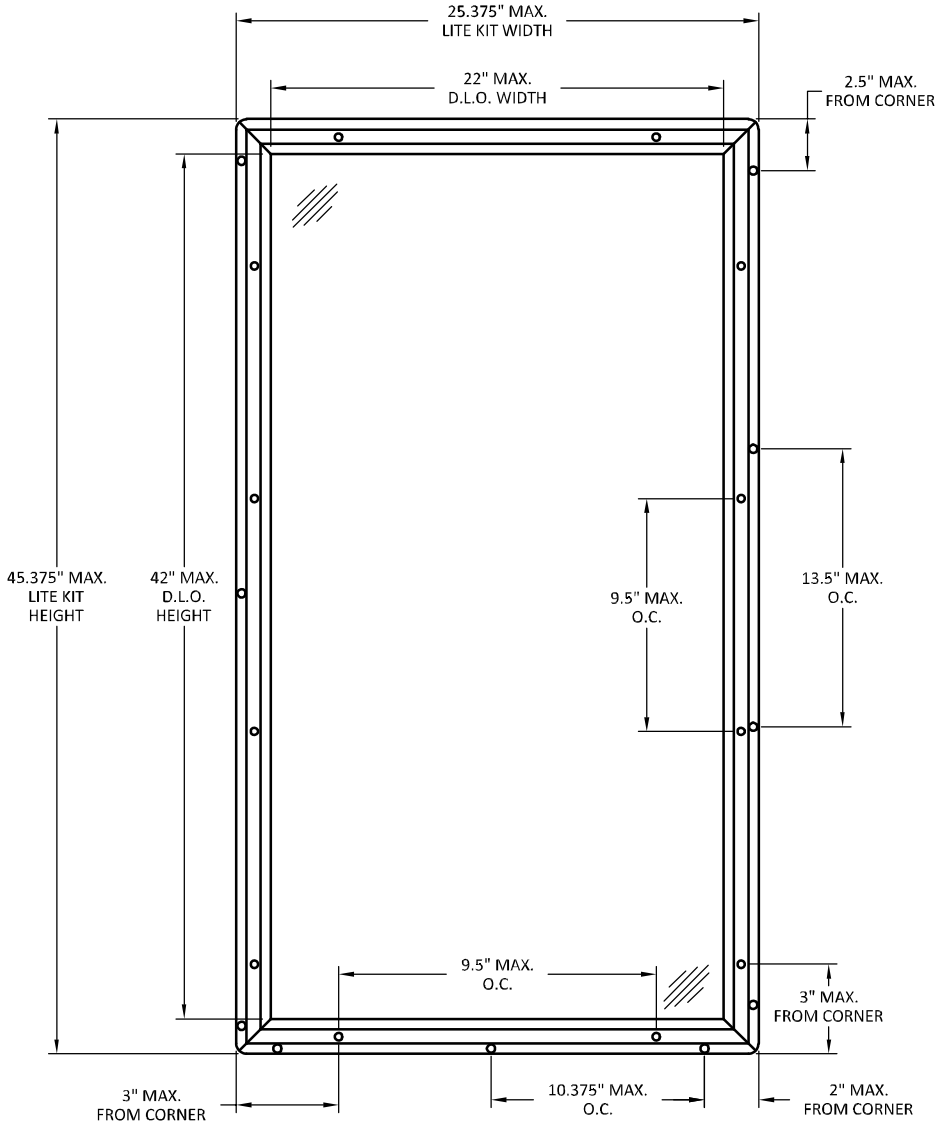

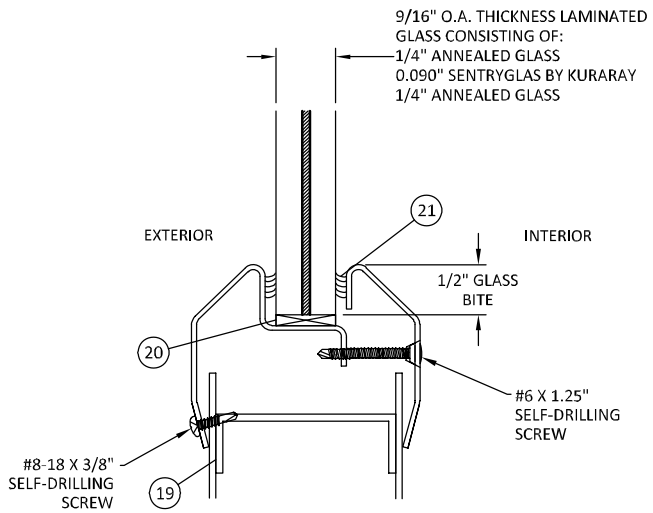

GLAZING DETAIL

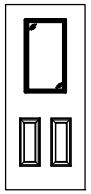

AVAILABLE DOOR PANEL CONFIGURATIONS

NOTE: CUSTOM EMBOSSING AVAILABLE.
CONTACT MANUFACTURER FOR MORE INFORMATION.

DE LA FONTAINE
STEEL DOORS AND FRAMES
4115 BRODEUR STREET
SHERBROOKE, QC J1L1K4
PH: (819) 821-9230 FX: (819) 569-5928

TITLE: INSWING SINGLE GLAZED STEEL DOOR (HVHZ) (IMPACT)
GLAZING DETAIL & ANCHOR LAYOUT

PREPARED BY: BUILDING DROPS, INC.
1900 NE MIAMI COURT, STE 2-15
MIAMI, FL 33132
PH: (954)399-8478
FAX: (954)744.4738
WEB: www.buildingdrops.com
BUILDING DROPS

REMARKS	BY	DATE

THE INSTALLATION DETAILS DESCRIBED HEREIN ARE GENERIC AND MAY NOT REFLECT ACTUAL CONDITIONS FOR A SPECIFIC SITE. IF SITE CONDITIONS CAUSE INSTALLATION TO DEVIATE FROM THE REQUIREMENTS DETAILED HEREIN, A LICENSED ENGINEER OR ARCHITECT SHALL PREPARE SITE SPECIFIC DOCUMENTS FOR USE WITH THIS DOCUMENT.

HERMES F. NORERO
LICENSE
No. 73778
STATE OF
FLORIDA
PROFESSIONAL ENGINEER

HERMES F. NORERO, P.E.
LICENSED IN FLORIDA
BUILDING DROPS INC
1900 NE MIAMI COURT # 2-15
MIAMI, FL 33132
FBPE CERT. OF AUTHORIZATION No. 29578

FL46851

DATE: 06.20.24
DWG. BY: DI
CHK. BY: HFN
SCALE: NTS
DWG. #: DLF005
SHEET: 2 OF 16

6/21/2024 4:04 PM
c:\users\dylanwata\building drops, inc\building drops landing - common\projects\de la fontaine\fbc-22-0614.1 - fbc submittal - hollow metal swing door ts-os\dwgs\inswing glazed\dlf005.dwg

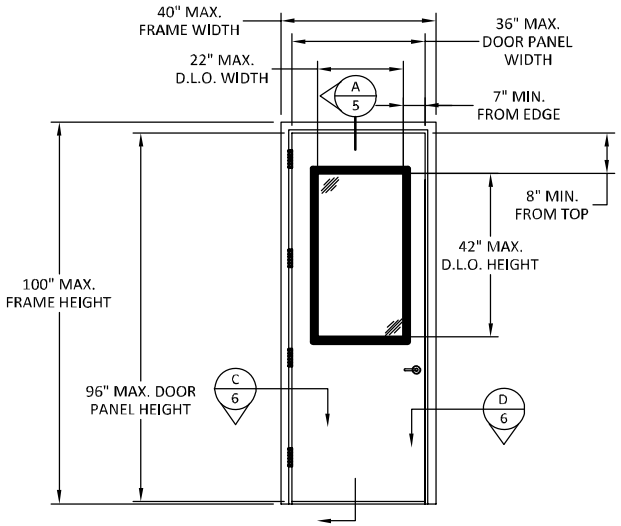

ELEVATION A

CYLINDRICAL LOCK

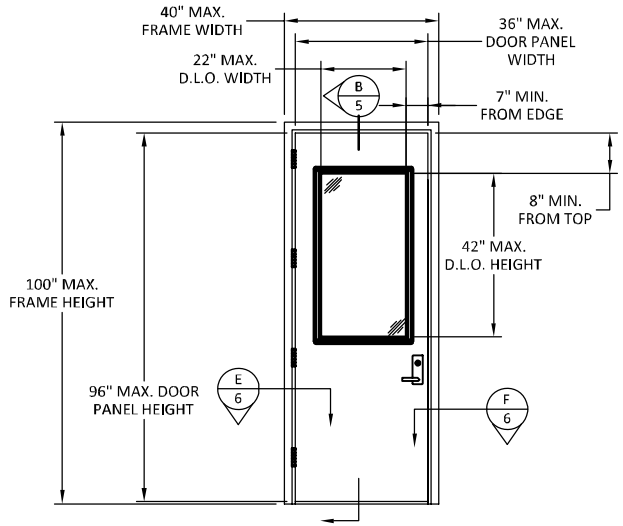

ELEVATION B

MORTISE LOCKSET WITH DEAD BOLT

NOTE: MAXIMUM FRAME HEIGHT TO BE 100" WHEN OPTIONAL 4" HEADER FRAME IS USED. USE WITH FULLY WELDED OR FACE WELDED CORNERS ONLY.

DE LA FONTAINE
STEEL DOORS AND FRAMES

4115 BRODEUR STREET
SHERBROOKE, QC J1L1K4
PH: (819) 821-9230 FX: (819) 569-5928

TITLE: INSWING SINGLE GLAZED STEEL DOOR (HVHZ) (IMPACT) ELEVATIONS

PREPARED BY: BUILDING DROPS, INC.
1900 NE MIAMI COURT, STE 2-15
MIAMI, FL 33132
PH: (954)399-8478
FAX: (954)744.4738
WEB: www.buildingdrops.com

REMARKS	BY	DATE

THE INSTALLATION DETAILS DESCRIBED HEREIN ARE GENERIC AND MAY NOT REFLECT ACTUAL CONDITIONS FOR A SPECIFIC SITE. IF SITE CONDITIONS CAUSE INSTALLATION TO DEVIATE FROM THE REQUIREMENTS DETAILED HEREIN, A LICENSED ENGINEER OR ARCHITECT SHALL PREPARE SITE SPECIFIC DOCUMENTS FOR USE WITH THIS DOCUMENT.

HERMES F. NORERO LICENSE No. 73778 STATE OF FLORIDA PROFESSIONAL ENGINEER

HERMES F. NORERO, P.E.
PRESIDENT & MANAGER
BUILDING DROPS, INC
1900 NE MIAMI COURT # 2-15
MIAMI, FL 33132
FBPE CERT. OF AUTHORIZATION No. 29578

FL46851

DATE: 06.20.24

DWG. BY: DI | CHK. BY: HFN

SCALE: NTS

DWG. #: DLF005

SHEET: 3 OF 16

6/21/2024 4:04 PM
c:\users\dylanwata\building drops, inc\building drops landing - common\projects\de la fontaine\fbc-22-0614.1 - fbc submittal - hollow metal swing door ts-os\dwgs\inswing glazed\dlf005.dwg

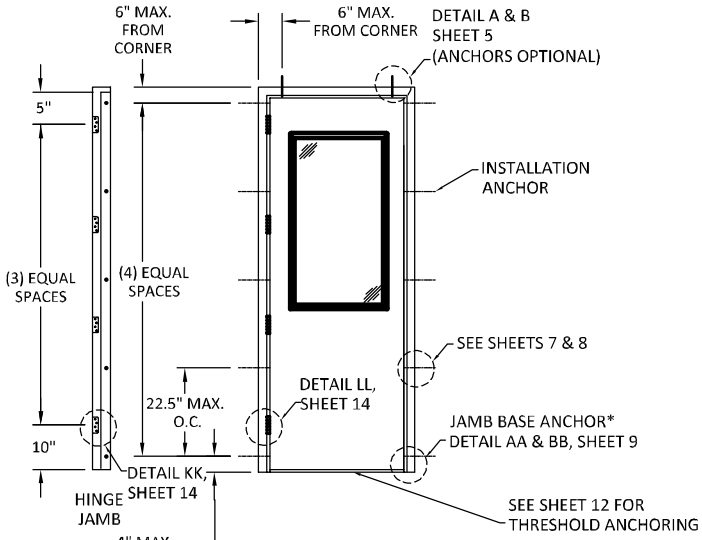

ANCHOR LAYOUT C

EWA, EWA TUBE, COMBINATION & Z ANCHORS

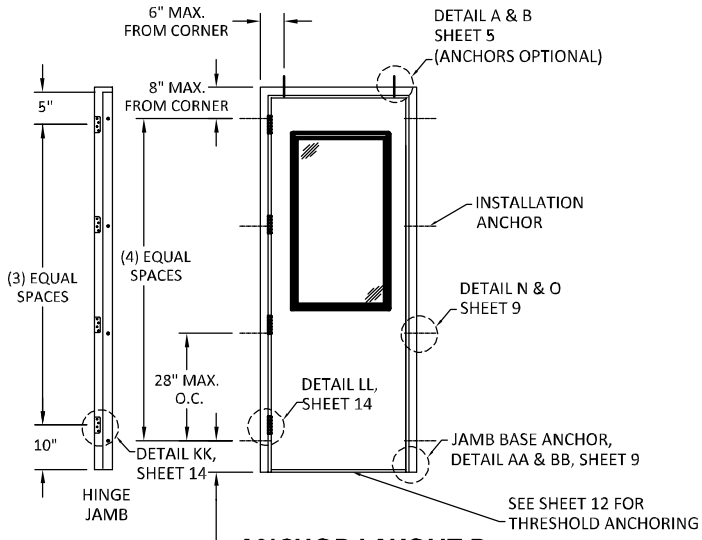

ANCHOR LAYOUT D

MASONRY WIRE/T ANCHORS

NOTES:

* **JAMB BASE ANCHOR IS ONLY REQUIRED FOR MASONRY WIRE/T, COMBINATION & Z ANCHORS. NOT REQUIRED FOR EWA ANCHORS**

DE LA FONTAINE
STEEL DOORS AND FRAMES

4115 BRODEUR STREET
SHERBROOKE, QC J1L1K4
PH: (819) 821-9230 FX: (819) 569-5928

TITLE: INSWING SINGLE GLAZED STEEL DOOR (HVHZ) (IMPACT)

ANCHOR LAYOUT AND NOTES

PREPARED BY: BUILDING DROPS, INC.
1900 NE MIAMI COURT, STE 2-15
MIAMI, FL 33132
PH: (954)399-8478
FAX: (954)744.4738
WEB: www.buildingdrops.com

REMARKS	BY	DATE

THE INSTALLATION DETAILS DESCRIBED HEREIN ARE GENERIC AND MAY NOT REFLECT ACTUAL CONDITIONS FOR A SPECIFIC SITE. IF SITE CONDITIONS CAUSE INSTALLATION TO DEVIATE FROM THE REQUIREMENTS DETAILED HEREIN, A LICENSED ENGINEER OR ARCHITECT SHALL PREPARE SITE SPECIFIC DOCUMENTS FOR USE WITH THIS DOCUMENT.

HERMES F. NORERO LICENSE No. 73778 STATE OF FLORIDA PROFESSIONAL ENGINEER

HERMES F. NORERO, P.E.
FLORIDA LICENSE No. 73778
BUILDING DROPS, INC
1900 NE MIAMI COURT # 2-15
MIAMI, FL 33132
FBPE CERT. OF AUTHORIZATION No. 29578

FL46851

DATE: 06.20.24	
DWG. BY: DI	CHK. BY: HFN
SCALE: NTS	
DWG. #: DLF005	
SHEET: 4 OF 16	

6/21/2024 4:04 PM
c:\users\dj\appdata\local\building drops, inc\building drops landing - common\projects\de la fontaine\fbc-22-0614.1 - fbc submittal - hollow metal swing door ts-os\dwgs\inswing glazed\dlf005.dwg

6/21/2024 4:04 PM
c:\users\dylanwata\building drops, inc\building drops landing - common\projects\de la fontaine\fbc-22-0614.1 - fbc submittal - hollow metal swing door ts-os\dwgs\inswing glazed\dlf005.dwg

NOTE: EWA TUBE SHOWN. EWA IS QUALIFIED FOR ALL INSTALLATION SUBSTRATES SHOWN.

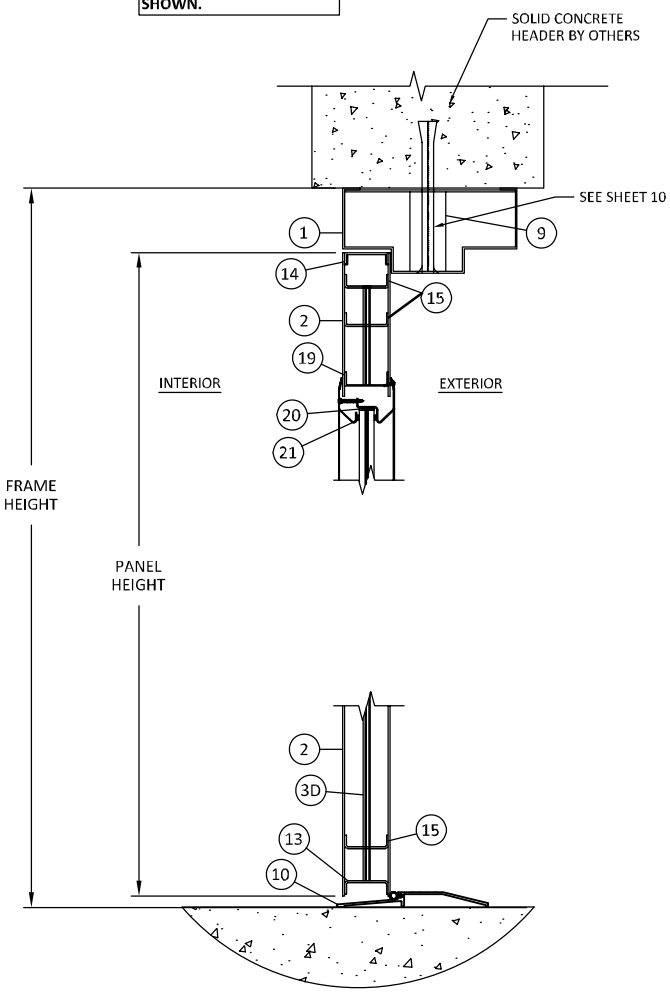

A/5 VERTICAL SECTION
HEAD/SILL - CONCRETE/MASONRY
(CYLINDRICAL LOCK OR MORTISE LOCK WITH DEADBOLT)

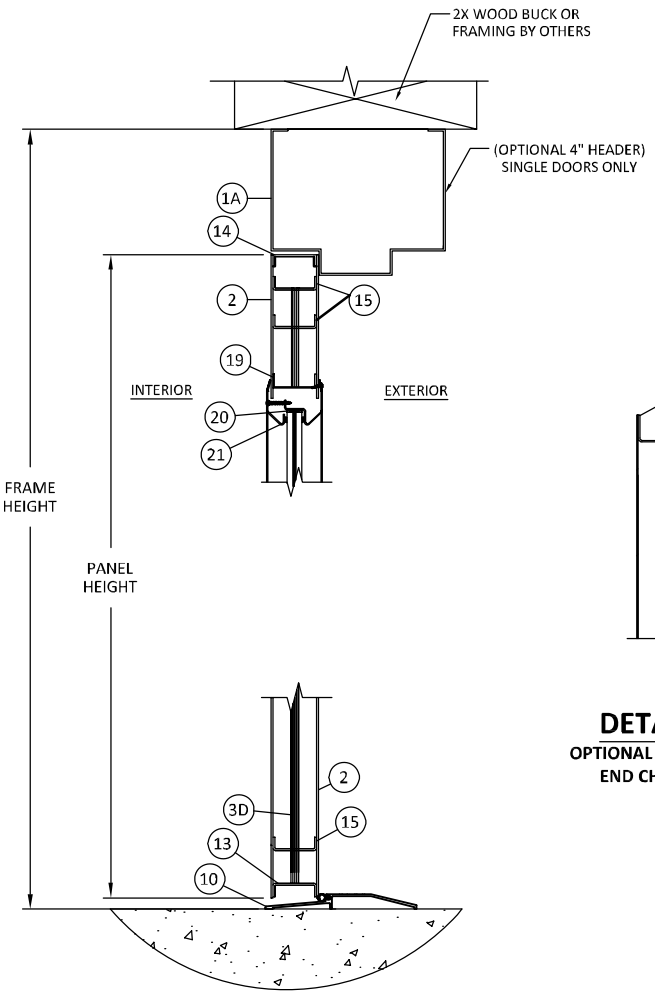

B/5 VERTICAL SECTION
HEAD - 2X WOOD FRAME
SILL - CONCRETE

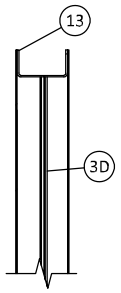

DETAIL Z
OPTIONAL STANDARD END CHANNEL

DE LA FONTAINE
STEEL DOORS AND FRAMES
4115 BRODEUR STREET
SHERBROOKE, QC J1L1K4
PH: (819) 821-9230 FX: (819) 569-5928

TITLE: INSWING SINGLE GLAZED STEEL DOOR (HVHZ) (IMPACT)
VERTICAL SECTIONS

PREPARED BY: BUILDING DROPS, INC.
1900 NE MIAMI COURT, STE. 2-15
MIAMI, FL 33132
PH: (954)399-8478
FAX: (954)744.4738
WEB: www.buildingdrops.com

REMARKS	BY	DATE

THE INSTALLATION DETAILS DESCRIBED HEREIN ARE GENERIC AND MAY NOT REFLECT ACTUAL CONDITIONS FOR A SPECIFIC SITE. IF SITE CONDITIONS CAUSE INSTALLATION TO DEVIATE FROM THE REQUIREMENTS DETAILED HEREIN, A LICENSED ENGINEER OR ARCHITECT SHALL PREPARE SITE SPECIFIC DOCUMENTS FOR USE WITH THIS DOCUMENT.

HERMES F. NORERO LICENSE No. 73778 STATE OF FLORIDA PROFESSIONAL ENGINEER

HERMES F. NORERO, P.E.
STRUCTURAL ENGINEER
BUILDING DROPS INC
1900 NE MIAMI COURT # 2-15
MIAMI, FL 33132
FBPE CERT. OF AUTHORIZATION No. 29578

FL46851

DATE: 06.20.24
DWG. BY: DI
CHK. BY: HFN
SCALE: NTS
DWG. #: DLF005
SHEET: 5 OF 16

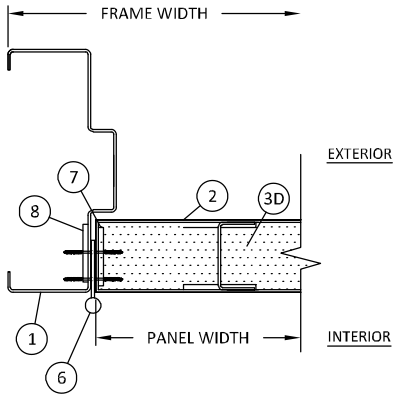

C/6 HORIZONTAL SECTION

BUTT HINGE JAMB

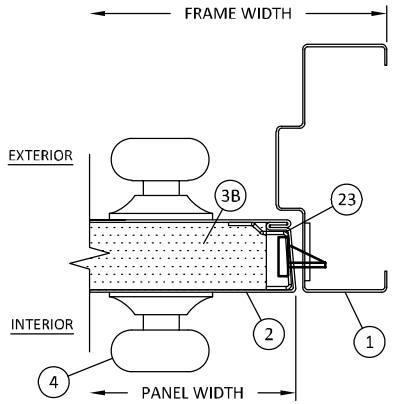

D/6 HORIZONTAL SECTION

CYLINDRICAL LOCK LOCK JAMB

NOTE: DETAILS SHOWN WITH VARYING DOOR CORE TYPES. ANY DETAIL IS APPROVED TO BE USED WITH ANY CORE TYPE.

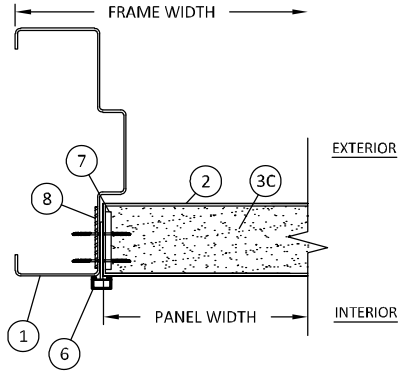

E/6 HORIZONTAL SECTION

CONTINUOUS HINGE JAMB

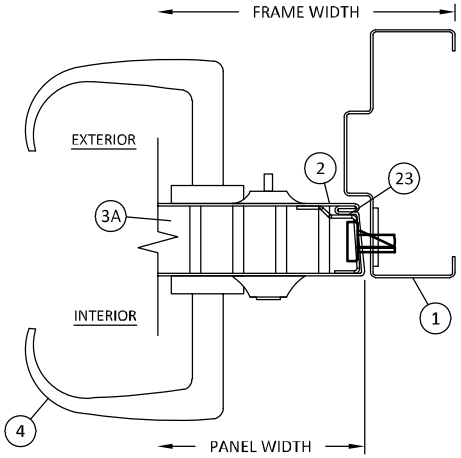

F/6 HORIZONTAL SECTION

MORTISE LOCK WITH DEADBOLT LOCK JAMB

DE LA FONTAINE
STEEL DOORS AND FRAMES
4115 BRODEUR STREET
SHERBROOKE, QC J1L1K4
PH: (819) 821-9230 FX: (819) 569-5928

TITLE: INSWING SINGLE GLAZED STEEL DOOR (HVHZ) (IMPACT)
HORIZONTAL SECTIONS

PREPARED BY: BUILDING DROPS, INC.
1900 NE MIAMI COURT, STE. 2-15
MIAMI, FL 33132
PH: (954)399-8478
FAX: (954)744.4738
WEB: www.buildingdrops.com

REMARKS	BY	DATE

THE INSTALLATION DETAILS DESCRIBED HEREIN ARE GENERIC AND MAY NOT REFLECT ACTUAL CONDITIONS FOR A SPECIFIC SITE. IF SITE CONDITIONS CAUSE INSTALLATION TO DEVIATE FROM THE REQUIREMENTS DETAILED HEREIN, A LICENSED ENGINEER OR ARCHITECT SHALL PREPARE SITE SPECIFIC DOCUMENTS FOR USE WITH THIS DOCUMENT.

HERMES F. NORERO LICENSE No. 73778 STATE OF FLORIDA PROFESSIONAL ENGINEER

HERMES F. NORERO, P.E.
FLORIDA LICENSE No. 73778
BUILDING DROPS INC
1900 NE MIAMI COURT # 2-15
MIAMI, FL 33132
FBPE CERT. OF AUTHORIZATION No. 29578

FL46851

DATE: 06.20.24

DWG. BY: DI | CHK. BY: HFN

SCALE: NTS

DWG. #: DLF005

SHEET: 6 OF 16

6/21/2024 4:04 PM
c:\users\dylanvata\building drops, inc\building drops landing - common\projects\de la fontaine\fbc-22-0614.1 - fbc submittal - hollow metal swing door ts-os\dwgs\inswing glazed\dlf005.dwg

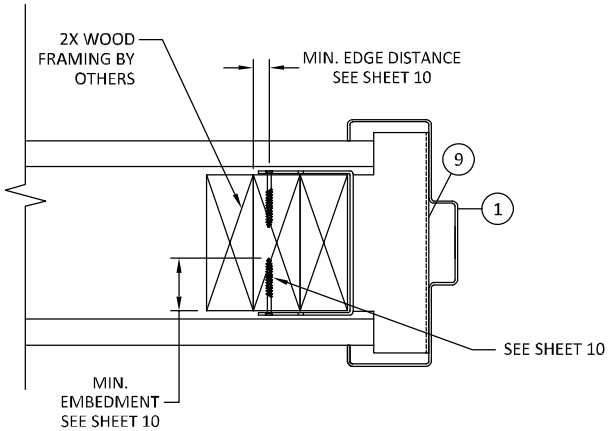

G/7 HORIZONTAL SECTION
COMBINATION ANCHOR
WOOD STUD

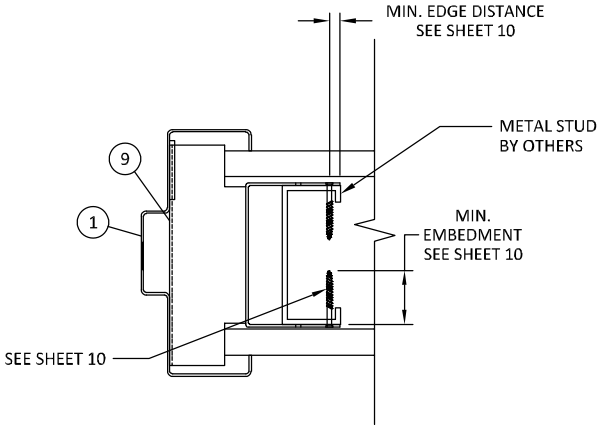

H/7 HORIZONTAL SECTION
COMBINATION ANCHOR
METAL STUD

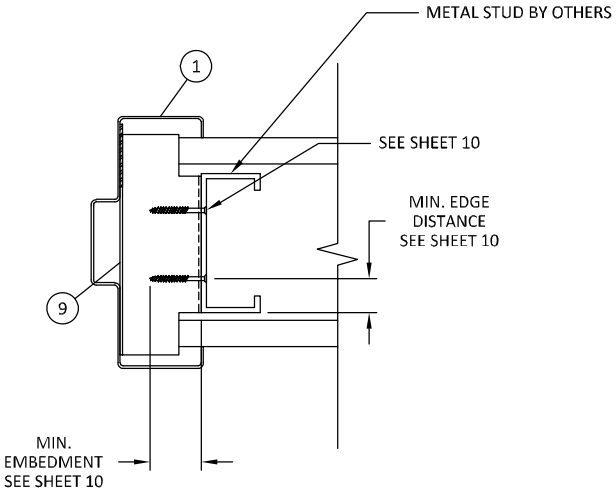

I/7 HORIZONTAL SECTION
Z ANCHOR
METAL STUD

DE LA FONTAINE
STEEL DOORS AND FRAMES
4115 BRODEUR STREET
SHERBROOKE, QC J1L1K4
PH: (819) 821-9230 FX: (819) 569-5928

TITLE: INSWING SINGLE GLAZED STEEL DOOR (HVHZ) (IMPACT)
INSTALLATION DETAILS - COMBINATION AND Z ANCHORS

PREPARED BY: BUILDING DROPS, INC.
1900 NE MIAMI COURT, STE 2-15
MIAMI, FL 33132
PH: (954)399-8478
FAX: (954)744.4738
WEB: www.buildingdrops.com

REMARKS	BY	DATE

THE INSTALLATION DETAILS DESCRIBED HEREIN ARE GENERIC AND MAY NOT REFLECT ACTUAL CONDITIONS FOR A SPECIFIC SITE. IF SITE CONDITIONS CAUSE INSTALLATION TO DEVIATE FROM THE REQUIREMENTS DETAILED HEREIN, A LICENSED ENGINEER OR ARCHITECT SHALL PREPARE SITE SPECIFIC DOCUMENTS FOR USE WITH THIS DOCUMENT.

HERMES F. NORERO LICENSE No. 73778 STATE OF FLORIDA PROFESSIONAL ENGINEER

HERMES F. NORERO, P.E.
PRESIDENT & MANAGER
BUILDING DROPS, INC
1900 NE MIAMI COURT # 2-15
MIAMI, FL 33132
FBPE CERT. OF AUTHORIZATION No. 29578

FL46851

DATE: 06.20.24
DWG. BY: DI
CHK. BY: HFN
SCALE: NTS
DWG. #: DLF005
SHEET: 7 OF 16

6/21/2024 4:04 PM
c:\users\dylanwata\building drops, inc\building drops landing - common\projects\de la fontaine\fbc-22-0614.1 - fbc submittal - hollow metal swing door ts-os\dwgs\inswing glazed\dlf005.dwg

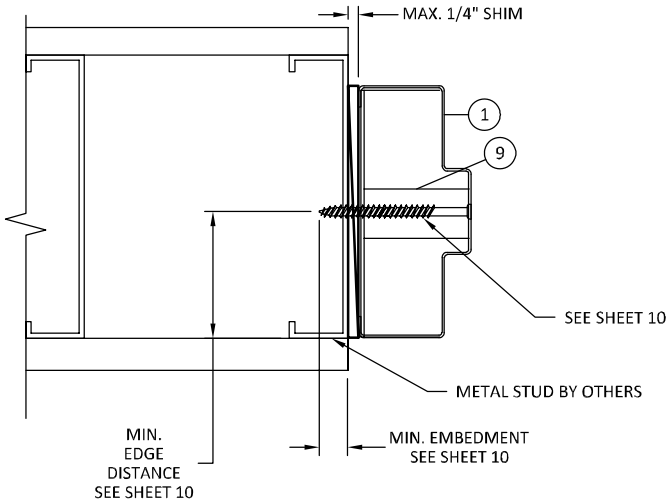

J/8 HORIZONTAL SECTION

EWA TUBE ANCHOR METAL STUD

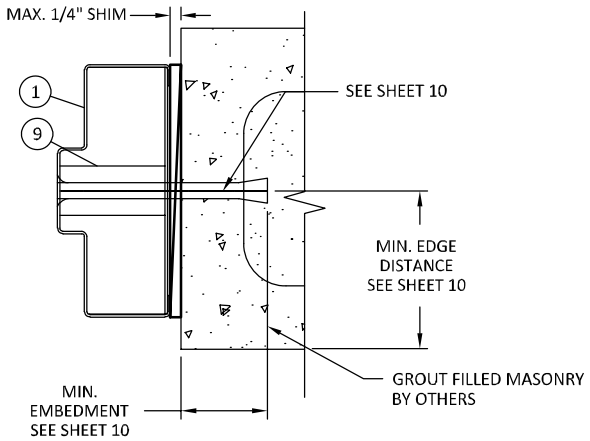

K/8 HORIZONTAL SECTION

EWA TUBE ANCHOR CONCRETE MASONRY UNIT

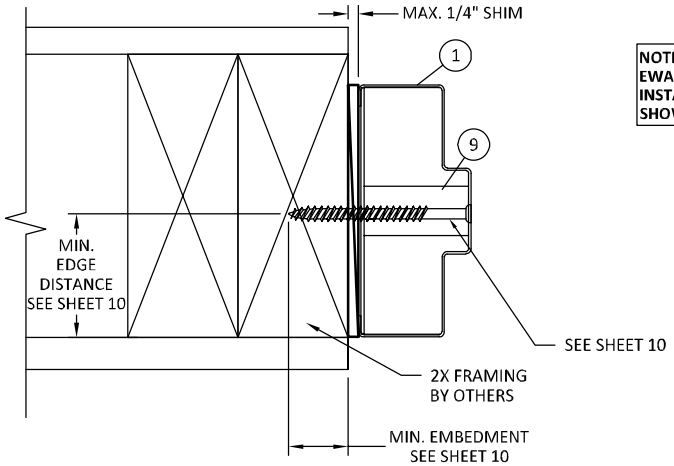

NOTE: EWA TUBE SHOWN. EWA IS QUALIFIED FOR ALL INSTALLATION SUBSTRATES SHOWN.

L/8 HORIZONTAL SECTION

EWA TUBE ANCHOR WOOD STUD

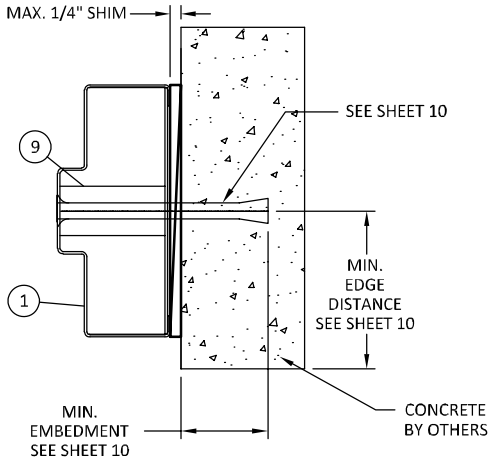

M/8 HORIZONTAL SECTION

EWA TUBE ANCHOR CONCRETE

DE LA FONTAINE
STEEL DOORS AND FRAMES
4115 BRODEUR STREET
SHERBROOKE, QC J1L1K4
PH: (819) 821-9230 FX: (819) 569-5928

TITLE: INSWING SINGLE GLAZED STEEL DOOR (HVHZ) (IMPACT)
INSTALLATION DETAILS - EWA ANCHORS

PREPARED BY: BUILDING DROPS, INC.
1900 NE MIAMI COURT, STE 2-15
MIAMI, FL 33132
PH: (954)399-8478
FAX: (954)744.4738
WEB: www.buildingdrops.com

REMARKS	BY	DATE

THE INSTALLATION DETAILS DESCRIBED HEREIN ARE GENERIC AND MAY NOT REFLECT ACTUAL CONDITIONS FOR A SPECIFIC SITE. IF SITE CONDITIONS CAUSE INSTALLATION TO DEVIATE FROM THE REQUIREMENTS DETAILED HEREIN, A LICENSED ENGINEER OR ARCHITECT SHALL PREPARE SITE SPECIFIC DOCUMENTS FOR USE WITH THIS DOCUMENT.

HERMES F. NORERO LICENSE No. 73778 STATE OF FLORIDA PROFESSIONAL ENGINEER

HERMES F. NORERO, P.E.
STRUCTURAL ENGINEER
BUILDING DROPS, INC
1900 NE MIAMI COURT # 2-15
MIAMI, FL 33132
FBPE CERT. OF AUTHORIZATION No. 29578

FL46851

DATE: 06.20.24
DWG. BY: DI
CHK. BY: HFN
SCALE: NTS
DWG. #: DLF005
SHEET: 8 OF 16

6/21/2024 4:04 PM
c:\users\dylanvata\building drops, inc\building drops landing - common\projects\de la fontaine\fbc-22-0614.1 - fbc submittal - hollow metal swing door ts-os\dwgs\inswing glazed\dlf005.dwg

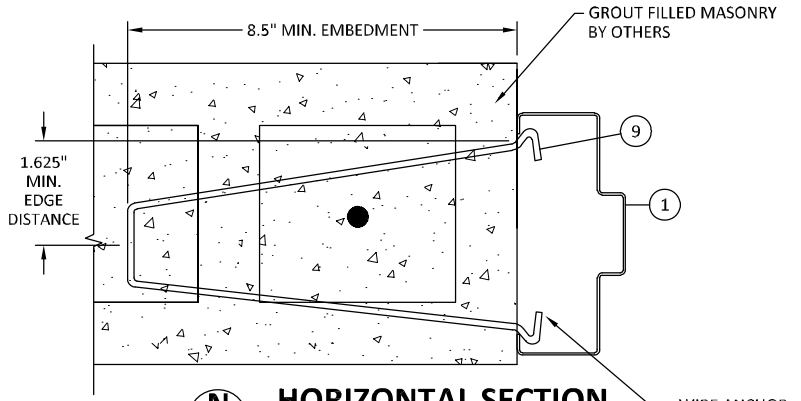

N/9 HORIZONTAL SECTION

WIRE ANCHOR
CONCRETE/MASONRY

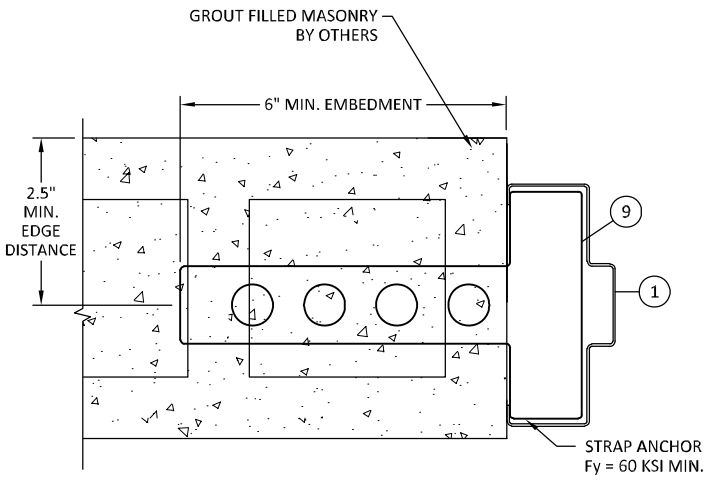

O/9 HORIZONTAL SECTION

T- STRAP ANCHOR
CONCRETE/MASONRY

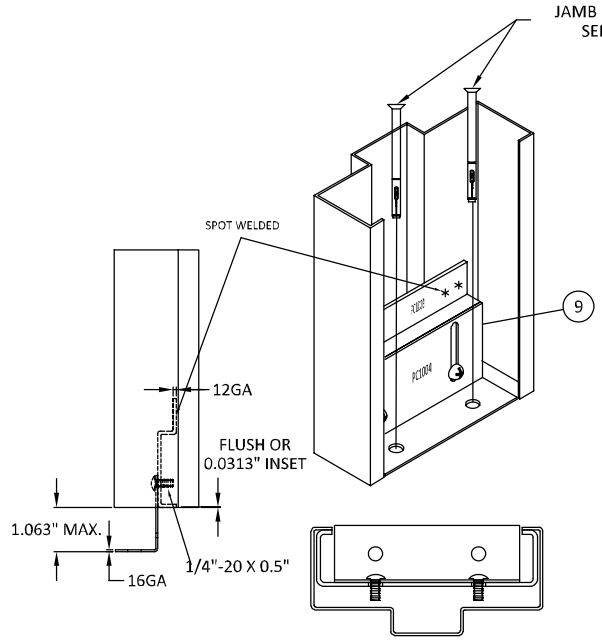

NOTE: WELDED OR ADJUSTABLE BASE ANCHOR TO BE USED WITH T-STRAP, WIRE, COMBINATION & Z ANCHOR ONLY

DETAIL AA

ADJUSTABLE BASE ANCHOR

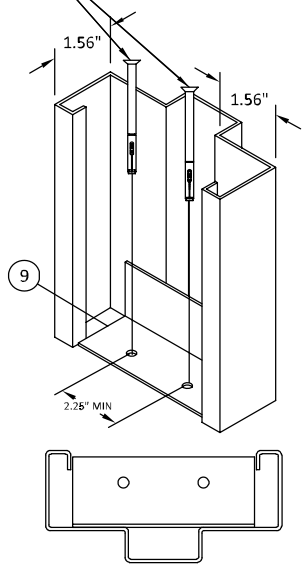

DETAIL BB

WELDED BASE ANCHOR

DE LA FONTAINE
STEEL DOORS AND FRAMES

4115 BRODEUR STREET
SHERBROOKE, QC J1L1K4
PH: (819) 821-9230 FX: (819) 569-5928

TITLE: INSWING SINGLE GLAZED STEEL DOOR (HVHZ) (IMPACT)
INSTALLATION DETAILS - WIRE/T MASONRY & JAMB BASE ANCHORS

PREPARED BY: BUILDING DROPS, INC.
1900 NE MIAMI COURT, STE 2-15
MIAMI, FL 33132
PH: (954)399-8478
FAX: (954)744.4738
WEB: www.buildingdrops.com

REMARKS	BY	DATE

THE INSTALLATION DETAILS DESCRIBED HEREIN ARE GENERIC AND MAY NOT REFLECT ACTUAL CONDITIONS FOR A SPECIFIC SITE. IF SITE CONDITIONS CAUSE INSTALLATION TO DEVIATE FROM THE REQUIREMENTS DETAILED HEREIN, A LICENSED ENGINEER OR ARCHITECT SHALL PREPARE SITE SPECIFIC DOCUMENTS FOR USE WITH THIS DOCUMENT.

HERMES F. NORERO LICENSE No. 73778 STATE OF FLORIDA PROFESSIONAL ENGINEER

HERMES F. NORERO, P.E.
PRESIDENT & MANAGER
BUILDING DROPS INC
1900 NE MIAMI COURT # 2-15
MIAMI, FL 33132
FBPE CERT. OF AUTHORIZATION No. 29578

FL46851

DATE: 06.20.24
DWG. BY: DI
CHK. BY: HFN
SCALE: NTS
DWG. #: DLF005
SHEET: 9 OF 16

6/21/2024 4:04 PM
c:\users\dj\dropbox\building drops, inc\building drops landing - common\projects\de la fontaine\fbc-22-0514.1 - fbc submittal - hollow metal swing door ts-os\dwgs\inswing glazed\dlf005.dwg

INSTALLATION NOTES:

1. ONE (1) INSTALLATION ANCHOR IS REQUIRED AT EACH ANCHOR LOCATION SHOWN UNLESS OTHERWISE NOTED.
2. THE NUMBER OF INSTALLATION ANCHORS DEPICTED IS THE MINIMUM NUMBER OF ANCHORS TO BE USED FOR PRODUCT INSTALLATION.
3. INSTALL INDIVIDUAL INSTALLATION ANCHORS WITHIN A TOLERANCE OF ±1/2 INCH OF THE DEPICTED LOCATION IN THE ANCHOR LAYOUT DETAIL (I.E., WITHOUT CONSIDERATION OF TOLERANCES). TOLERANCES ARE NOT CUMULATIVE FROM ONE INSTALLATION ANCHOR TO THE NEXT.
4. SHIM AS REQUIRED AT EACH INSTALLATION ANCHOR WITH LOAD BEARING SHIM(S). MAXIMUM ALLOWABLE SHIM STACK TO BE 1/4 INCH. SHIM WHERE SPACE OF 1/16 INCH OR GREATER OCCURS. SHIM(S) SHALL BE CONSTRUCTED OF HIGH DENSITY PLASTIC OR BETTER.
5. MINIMUM EMBEDMENT AND EDGE DISTANCE EXCLUDE WALL FINISHES, INCLUDING BUT NOT LIMITED TO STUCCO, FOAM, BRICK VENEER, AND SIDING.
6. INSTALLATION ANCHORS AND ASSOCIATED HARDWARE MUST BE MADE OF CORROSION RESISTANT MATERIAL OR HAVE A CORROSION RESISTANT COATING.
7. FOR GROUT FILLED BLOCK, DO NOT INSTALL INSTALLATION ANCHORS INTO MORTAR JOINTS. EDGE DISTANCE IS MEASURED FROM FREE EDGE OF BLOCK OR EDGE OF MORTAR JOINT INTO FACE SHELL OF BLOCK.
8. INSTALLATION ANCHORS SHALL BE INSTALLED IN ACCORDANCE WITH ANCHOR MANUFACTURER'S INSTALLATION INSTRUCTIONS, AND ANCHORS SHALL NOT BE USED IN SUBSTRATES WITH STRENGTHS LESS THAN THE MINIMUM STRENGTH SPECIFIED BY THE ANCHOR MANUFACTURER.

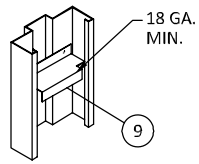

DETAIL CC
Z ANCHOR

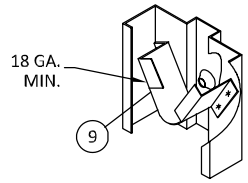

DETAIL EE
EXISTING WALL ANCHOR (EWA)

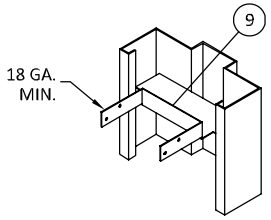

DETAIL DD
COMBINATION WOOD/STEEL STUD ANCHOR

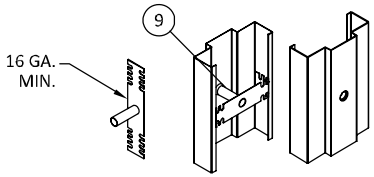

DETAIL FF
EXISTING WALL ANCHOR (EWA) TUBE

EWA TUBE ANCHOR SCHEDULE			
SUBSTRATE	ANCHOR TYPE	MIN. EMBEDMENT	MIN. EDGE DISTANCE
WOOD: MIN. S.G. = 0.55	3/8" LAG SCREW	3"	1"
STEEL: MIN. 18 GA. MIN. Fy = 33 ksi	3/8" GRADE 5 SELF-DRILLING/ SELF-TAPPING SCREW	3 THREADS MIN PENETRATION BEYOND METAL	1/2"
ALUMINUM: MIN. 1/8" THICK MIN. 6063-T5			
CONCRETE: MIN. f'c = 3000 psi	3/8" ITW TAPCON	1-1/2"	2-1/4"
	3/8" ITW DYNABOLT	1-1/2"	2-1/4"
MASONRY: CMU per ASTM C90 MIN. 2000 PSI	3/8" ITW TAPCON	1-1/2"	2-1/4"
	3/8" ITW DYNABOLT	1-1/2"	2-1/4"

Z ANCHOR SCHEDULE			
SUBSTRATE	ANCHOR TYPE	MIN. EMBEDMENT	MIN. EDGE DISTANCE
STEEL: MIN. 18 GA. MIN. Fy = 33 ksi	#10 GRADE 5 SELF-DRILLING/ SELF-TAPPING SCREW	3 THREADS MIN PENETRATION BEYOND METAL	1/2"
ALUMINUM: MIN. 1/8" THICK MIN. 6063-T5			

COMBINATION ANCHOR SCHEDULE			
SUBSTRATE	ANCHOR TYPE	MIN. EMBEDMENT	MIN. EDGE DISTANCE
WOOD: MIN. S.G. = 0.55	#10 WOOD SCREW	1-1/2"	1/2"
STEEL: MIN. 18 GA. MIN. Fy = 33 ksi	#10 GRADE 5 SELF-DRILLING/ SELF-TAPPING SCREW	3 THREADS MIN PENETRATION BEYOND METAL	1/2"
ALUMINUM: MIN. 1/8" THICK MIN. 6063-T5			

DE LA FONTAINE
STEEL DOORS AND FRAMES
4115 BRODEUR STREET
SHERBROOKE, QC J1L1K4
PH: (819) 821-9230 FX: (819) 569-5928

TITLE: INSWING SINGLE GLAZED STEEL DOOR (HVHZ) (IMPACT)
INSTALLATION DETAILS & NOTES

PREPARED BY: BUILDING DROPS, INC.
1900 NE MIAMI COURT, STE 2-15
MIAMI, FL 33132
PH: (954)399-8478
FAX: (954)744.4738
WEB: www.buildingdrops.com
BUILDING DROPS

REMARKS	BY	DATE

THE INSTALLATION DETAILS DESCRIBED HEREIN ARE GENERIC AND MAY NOT REFLECT ACTUAL CONDITIONS FOR A SPECIFIC SITE. IF SITE CONDITIONS CAUSE INSTALLATION TO DEVIATE FROM THE REQUIREMENTS DETAILED HEREIN, A LICENSED ENGINEER OR ARCHITECT SHALL PREPARE SITE SPECIFIC DOCUMENTS FOR USE WITH THIS DOCUMENT.

HERMES F. NORERO LICENSE No. 73778 STATE OF FLORIDA PROFESSIONAL ENGINEER

HERMES F. NORERO, P.E.
PRESIDENT & MANAGER
BUILDING DROPS, INC
1900 NE MIAMI COURT # 2-15
MIAMI, FL 33132
FBPE CERT. OF AUTHORIZATION No. 29578

FL46851

DATE: 06.20.24
DWG. BY: DI
CHK. BY: HFN
SCALE: NTS
DWG. #: DLF005
SHEET: 10 OF 16

6/21/2024 4:04 PM
c:\users\dlfonsata\building drops, inc\building drops landing - common\projects\de la fontaine\fbc-22-0614.1 - fbc submittal - hollow metal swing door ts-os\dwgs\inswing glazed\dlf005.dwg

GASKETING DETAILS FOR AIR INFILTRATION

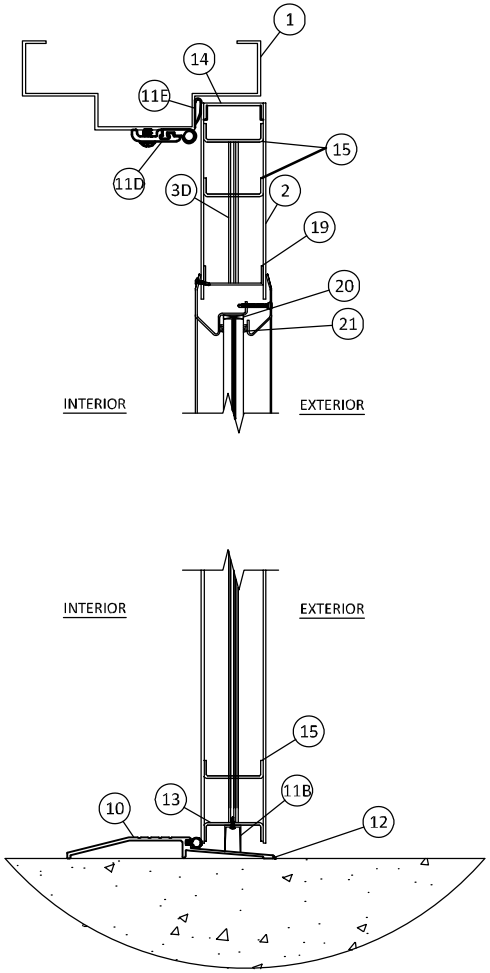

P 12 **VERTICAL SECTION**
AIR INFILTRATION

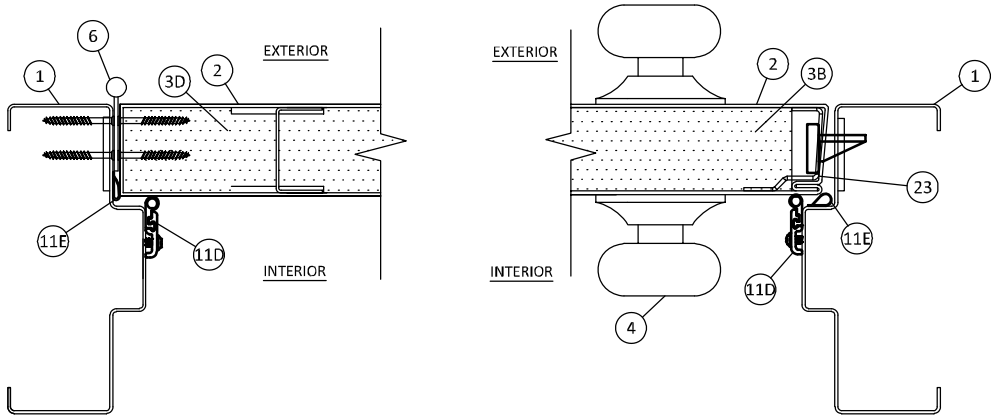

Q 12 **HORIZONTAL SECTION**
AIR INFILTRATION

NOTE:
1. SEAL ALL JOINTS WHERE FRAME MEETS WALL WITH BUTYL RUBBER OR SILICONE CAULK.
2. INSTALL THRESHOLD INTO BEAD OF BUTYL RUBBER OR SILICONE CAULK.

DE LA FONTAINE
STEEL DOORS AND FRAMES
4115 BRODEUR STREET
SHERBROOKE, QC J1L1K4
PH: (819) 821-9230 FX: (819) 569-5928

TITLE: INSWING SINGLE GLAZED STEEL DOOR (HVHZ) (IMPACT)
GASKETING DETAILS FOR AIR INFILTRATION

PREPARED BY: BUILDING DROPS, INC.
1900 NE MIAMI COURT, STE 2-15
MIAMI, FL 33132
PH: (954)399-8478
FAX: (954)744.4738
WEB: www.buildingdrops.com

REMARKS	BY	DATE

THE INSTALLATION DETAILS DESCRIBED HEREIN ARE GENERIC AND MAY NOT REFLECT ACTUAL CONDITIONS FOR A SPECIFIC SITE. IF SITE CONDITIONS CAUSE INSTALLATION TO DEVIATE FROM THE REQUIREMENTS DETAILED HEREIN, A LICENSED ENGINEER OR ARCHITECT SHALL PREPARE SITE SPECIFIC DOCUMENTS FOR USE WITH THIS DOCUMENT.

HERMES F. NORERO LICENSE No. 73778 STATE OF FLORIDA PROFESSIONAL ENGINEER

HERMES F. NORERO, P.E.
PRESIDENT & MANAGER
BUILDING DROPS, INC
1900 NE MIAMI COURT # 2-15
MIAMI, FL 33132
FBPE CERT. OF AUTHORIZATION No. 29578

FL46851

DATE: 06.20.24
DWG. BY: DI
CHK. BY: HFN
SCALE: NTS
DWG. #: DLF005
SHEET: 11 OF 16

6/21/2024 4:04 PM
c:\users\dylanwata\building drops, inc\building drops landing - common\projects\de la fontaine\fbc-22-0514.1 - fbc submittal - hollow metal swing door ts-os\dwgs\inswing glazed\dlf005.dwg

THRESHOLD ANCHOR SCHEDULE			
SUBSTRATE	ANCHOR TYPE	MIN. EMBEDMENT	MIN. EDGE DISTANCE
WOOD: MIN. S.G. = 0.55	#14 WOOD SCREW	1-1/2"	3/4"
CONCRETE: MIN. f'c = 3000 psi	1/4" ITW TAPCON	1-1/4"	2-1/2"

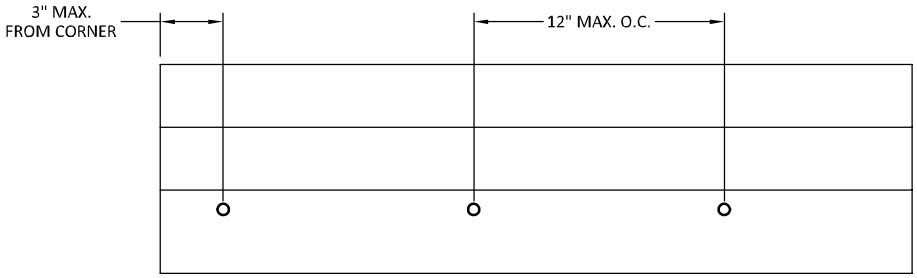

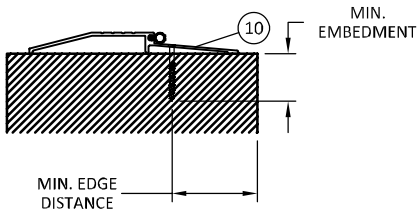

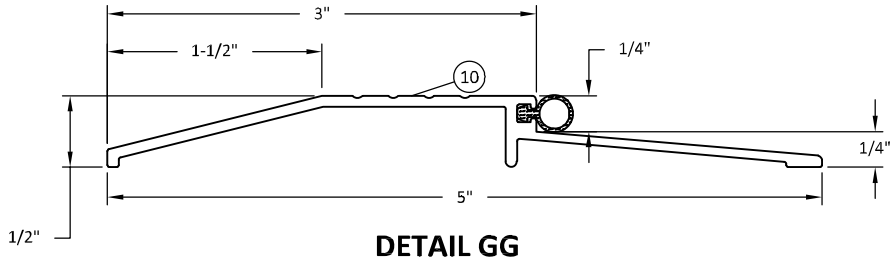

DETAIL GG

NGP 950N THRESHOLD

DE LA FONTAINE
STEEL DOORS AND FRAMES

4115 BRODEUR STREET
SHERBROOKE, QC J1L1K4
PH: (819) 821-9230 FX: (819) 569-5928

TITLE: INSWING SINGLE GLAZED STEEL DOOR (HVHZ) (IMPACT)

THRESHOLD DETAIL & ANCHOR LAYOUT

PREPARED BY: BUILDING DROPS, INC.
1900 NE MIAMI COURT, STE 2-15
MIAMI, FL 33132
PH: (954)399-8478
FAX: (954)744.4738
WEB: www.buildingdrops.com

REMARKS	BY	DATE

THE INSTALLATION DETAILS DESCRIBED HEREIN ARE GENERIC AND MAY NOT REFLECT ACTUAL CONDITIONS FOR A SPECIFIC SITE. IF SITE CONDITIONS CAUSE INSTALLATION TO DEVIATE FROM THE REQUIREMENTS DETAILED HEREIN, A LICENSED ENGINEER OR ARCHITECT SHALL PREPARE SITE SPECIFIC DOCUMENTS FOR USE WITH THIS DOCUMENT.

HERMES F. NORERO LICENSE No. 73778 STATE OF FLORIDA PROFESSIONAL ENGINEER

HERMES F. NORERO, P.E.
STRUCTURAL ENGINEER
BUILDING DROPS, INC
1900 NE MIAMI COURT # 2-15
MIAMI, FL 33132
FBPE CERT. OF AUTHORIZATION No. 29578

FL46851

DATE: 06.20.24

DWG. BY: DI

CHK. BY: HFN

SCALE: NTS

DWG. #: DLF005

SHEET: 12 OF 16

6/21/2024 4:04 PM
c:\users\dylanwata\building drops, inc\building drops landing - common\projects\de la fontaine\fbc-22-0614.1 - fbc submittal - hollow metal swing door ts-os\dwgs\inswing glazed\dlf005.dwg

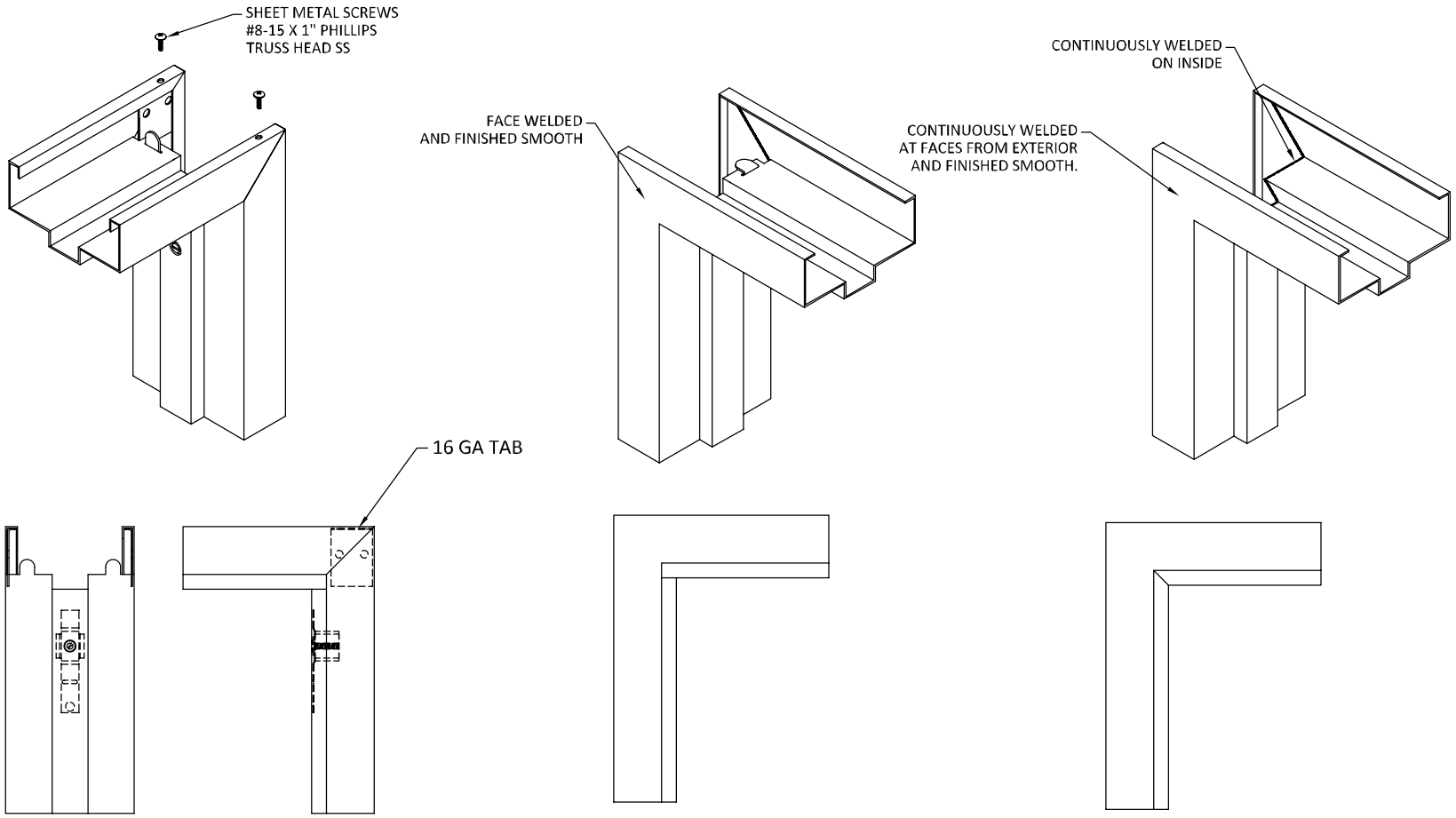

DETAIL HH
KNOCK DOWN CORNER CONSTRUCTION

DETAIL II
FACE WELDED CORNER CONSTRUCTION

DETAIL JJ
FULLY WELDED CORNER CONSTRUCTION

DE LA FONTAINE
STEEL DOORS AND FRAMES
4115 BRODEUR STREET
SHERBROOKE, QC J1L1K4
PH: (819) 821-9230 FX: (819) 569-5928

TITLE: INSWING SINGLE GLAZED STEEL DOOR (HVHZ) (IMPACT)
CORNER CONSTRUCTION

PREPARED BY: BUILDING DROPS, INC.
1900 NE MIAMI COURT, STE 2-15
MIAMI, FL 33132
PH: (954)399-8478
FAX: (954)744.4738
WEB: www.buildingdrops.com

REMARKS	BY	DATE

THE INSTALLATION DETAILS DESCRIBED HEREIN ARE GENERIC AND MAY NOT REFLECT ACTUAL CONDITIONS FOR A SPECIFIC SITE. IF SITE CONDITIONS CAUSE INSTALLATION TO DEVIATE FROM THE REQUIREMENTS DETAILED HEREIN, A LICENSED ENGINEER OR ARCHITECT SHALL PREPARE SITE SPECIFIC DOCUMENTS FOR USE WITH THIS DOCUMENT.

HERMES F. NORERO
LICENSE
No. 73778
STATE OF
FLORIDA
PROFESSIONAL ENGINEER

HERMES F. NORERO, P.E.
FLORIDA LICENSE No. 73778
BUILDING DROPS, INC
1900 NE MIAMI COURT # 2-15
MIAMI, FL 33132
FBPE CERT. OF AUTHORIZATION No. 29578

FL46851

DATE: 06.20.24

DWG. BY: DI | CHK. BY: HFN

SCALE: NTS

DWG. #: DLF005

SHEET: 13 OF 16

6/21/2024 4:04 PM
c:\users\dylanwata\building drops, inc\building drops landing - common\projects\de la fontaine\fbc-22-0514.1 - fbc submittal - hollow metal swing door ts-os\dwgs\inswing glazed\dlf005.dwg

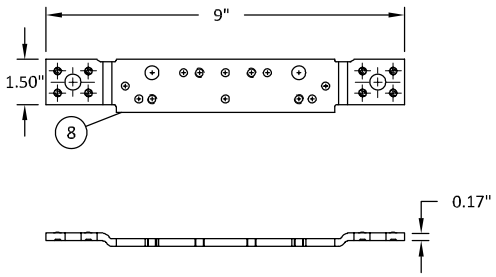

DETAIL KK
FRAME HINGE REINFORCEMENT

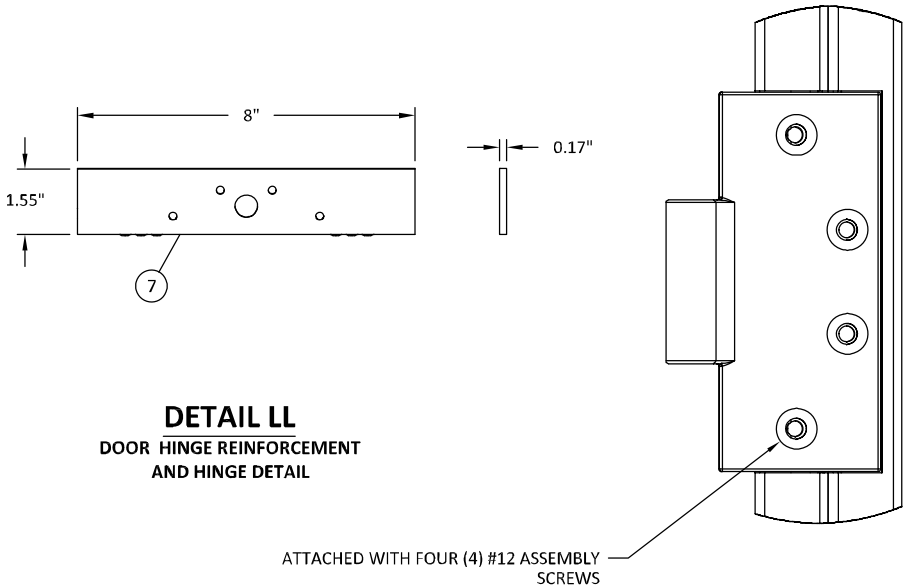

DETAIL LL
DOOR HINGE REINFORCEMENT AND HINGE DETAIL

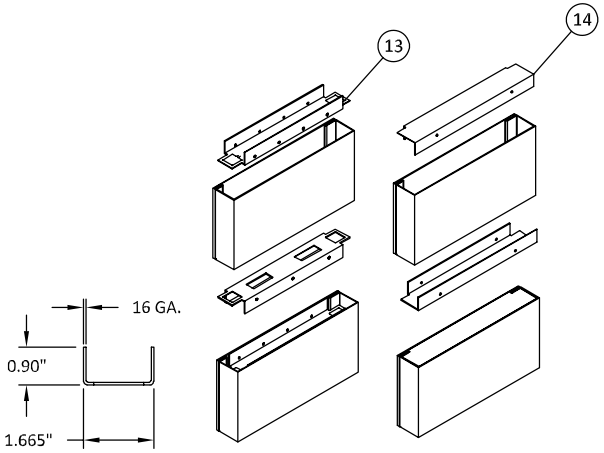

DETAIL MM
END CHANNEL REINFORCEMENTS

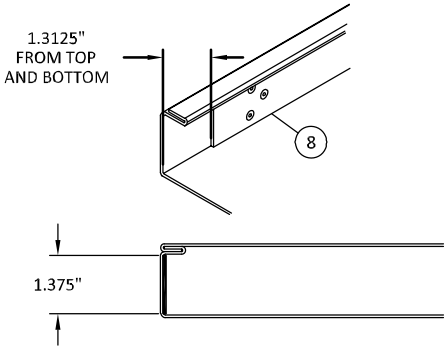

DETAIL NN
DOOR & FRAME CONTINUOUS HINGE REINFORCEMENT (OPTIONAL)

DE LA FONTAINE
STEEL DOORS AND FRAMES
4115 BRODEUR STREET
SHERBROOKE, QC J1L1K4
PH: (819) 821-9230 FX: (819) 569-5928

TITLE: INSWING SINGLE GLAZED STEEL DOOR (HVHZ) (IMPACT) REINFORCEMENTS

PREPARED BY: BUILDING DROPS, INC.
1900 NE MIAMI COURT, STE 2-15
MIAMI, FL 33132
PH: (954)399-8478
FAX: (954)744.4738
WEB: www.buildingdrops.com
BUILDING DROPS

REMARKS	BY	DATE

THE INSTALLATION DETAILS DESCRIBED HEREIN ARE GENERIC AND MAY NOT REFLECT ACTUAL CONDITIONS FOR A SPECIFIC SITE. IF SITE CONDITIONS CAUSE INSTALLATION TO DEVIATE FROM THE REQUIREMENTS DETAILED HEREIN, A LICENSED ENGINEER OR ARCHITECT SHALL PREPARE SITE SPECIFIC DOCUMENTS FOR USE WITH THIS DOCUMENT.

HERMES F. NORERO LICENSE No. 73778 STATE OF FLORIDA PROFESSIONAL ENGINEER

HERMES F. NORERO, P.E.
STRUCTURAL ENGINEER
BUILDING DROPS INC
1900 NE MIAMI COURT # 2-15
MIAMI, FL 33132
FBPE CERT. OF AUTHORIZATION No. 29578

FL46851

DATE: 06.20.24

DWG. BY: DI | CHK. BY: HFN

SCALE: NTS

DWG. #: DLF005

SHEET: 14 OF 16

6/21/2024 4:04 PM
c:\users\dfernavata\building drops, inc\building drops landing - common\projects\de la fontaine\fbc-22-0614.1 - fbc submittal - hollow metal swing door ts-os\dwgs\inswing glazed\dlf005.dwg

6/21/2024 4:04 PM
c:\users\dylanwata\building drops, inc\building drops landing - common\projects\de la fontaine\fbc-22-0614.1 - fbc submittal - hollow metal swing door ts-os\dwgs\inswing glazed\dlf005.dwg

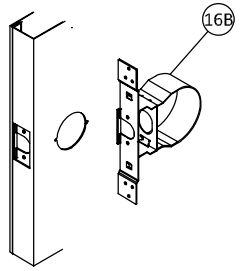

DETAIL OO
CYLINDRICAL LOCK REINFORCEMENT

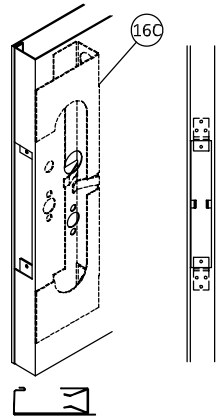

DETAIL PP
MORTISE LOCK REINFORCEMENT

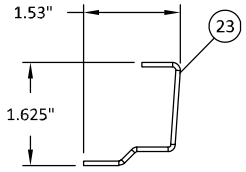

DETAIL QQ
LOCK STILE REINFORCEMENT

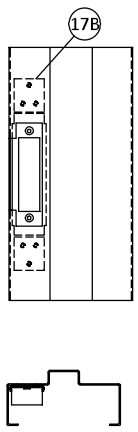

DETAIL RR
CYLINDRICAL LOCK STRIKE REINFORCEMENT

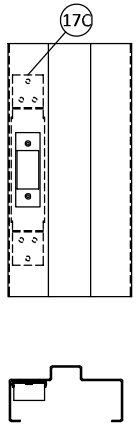

DETAIL SS
MORTISE LOCK STRIKE REINFORCEMENT

DE LA FONTAINE
STEEL DOORS AND FRAMES

4115 BRODEUR STREET
SHERBROOKE, QC J1L1K4
PH: (819) 821-9230 FX: (819) 569-5928

TITLE: INSWING SINGLE GLAZED STEEL DOOR (HVHZ) (IMPACT) REINFORCEMENTS

PREPARED BY: BUILDING DROPS, INC.
1900 NE MIAMI COURT, STE 2-15
MIAMI, FL 33132
PH: (954)399-8478
FAX: (954)744.4738
WEB: www.buildingdrops.com

REMARKS	BY	DATE

THE INSTALLATION DETAILS DESCRIBED HEREIN ARE GENERIC AND MAY NOT REFLECT ACTUAL CONDITIONS FOR A SPECIFIC SITE. IF SITE CONDITIONS CAUSE INSTALLATION TO DEVIATE FROM THE REQUIREMENTS DETAILED HEREIN, A LICENSED ENGINEER OR ARCHITECT SHALL PREPARE SITE SPECIFIC DOCUMENTS FOR USE WITH THIS DOCUMENT.

HERMES F. NORERO LICENSE No. 73778 STATE OF FLORIDA PROFESSIONAL ENGINEER

HERMES F. NORERO, P.E.
PRESIDENT & OWNER
BUILDING DROPS, INC
1900 NE MIAMI COURT # 2-15
MIAMI, FL 33132
FBPE CERT. OF AUTHORIZATION No. 29578

FL46851

DATE: 06.20.24	
DWG. BY: DI	CHK. BY: HFN
SCALE: NTS	
DWG. #: DLF005	
SHEET: 15 OF 16	

BILL OF MATERIAL

NO.	DESCRIPTION	MATERIAL
1	FRAME - 5-3/4" MIN. DEPTH	16 GA. MIN. A40/A60/G90 GALV. STEEL
1A	OPTIONAL 4" HEADER FRAME - 5-3/4" MIN. DEPTH	16 GA. MIN. A40/A60/G90 GALV. STEEL
2	DOOR LEAF PANEL SKIN	18 GA. MIN. A40/A60/G90 GALV. STEEL SHEETS
3	CORE MATERIAL:	
	A) HONEYCOMB	
	B) POLYSTYRENE	
	C) POLYURETHANE	
	D) STEEL STIFFENED (POLYSTYRENE OR POLYURETHANE)	
4	LOCKING HARDWARE - SEE SHEET 1	
6	4.5" MIN. BUTT HINGES SEE SHEET 1 NOTE 1.6	0.134" MIN. STEEL/BRASS
	OPTIONAL CONTINUOUS HINGE SEE SHEET 1 NOTE 1.6	ALUMINUM
7	DOOR HINGE REINFORCEMENTS	7 GA. STEEL
8	FRAME HINGE REINFORCEMENT	3/16" X 10" - 7 GA. STEEL
9	JAMB ANCHORS SEE SHEET 10 & 11	
	Z	18 GA. MIN. STEEL
	COMBINATION WOOD/STEEL STUD	
	EXISTING WALL ANCHOR (EWA)	
	EXISTING WALL ANCHOR (EWA) - TUBE	16 GA. MIN. STEEL
	MASONRY WIRE	-
	MASONRY T	-
	ADJUSTABLE/WELDED JAMB BASE	12 GA. STEEL
10	NGP 950N THRESHOLD WITH BUMPER GASKET	1/16" MIN. ALUMINUM
11	WEATHERSTRIPPING	
	B) NGP 331 DOOR SHOE	6063-T5 ALUMINUM / PPE / TPV
	D) NGP 137NA PERIMETER SEAL	
	E) NGP 5050 BULB SEAL	SILOXANE
12	CAULK	SILICONE OR BUTYL RUBBER
13	ST END CHANNEL	16 GA. STEEL
14	FWC END CHANNEL	16 GA. STEEL
15	HORIZONTAL REIN. CHANNELS	STEEL
16	DOOR LOCK REINFORCEMENT SEE SHEET 17	
	B) CYLINDRICAL LOCK REINFORCEMENT	16 GA. MIN. STEEL
	C) MORTISE LOCK REINFORCEMENT	16 GA. MIN. STEEL
17	FRAME LOCK STRIKE REINFORCEMENT SEE SHEET 17	
	B) CYLINDRICAL STRIKE REINFORCEMENT	16 GA. MIN. STEEL
	C) MORTISE STRIKE REINFORCEMENT	16 GA. MIN. STEEL
19	LITE KIT CHANNEL	STEEL
20	GLAZING TAPE	BUTYL RUBBER
21	DOW CORNING DOWSIL 995	SILICONE
23	LOCK STILE REINFORCEMENT	STEEL

DE LA FONTAINE
STEEL DOORS AND FRAMES

4115 BRODEUR STREET
SHERBROOKE, QC J1L1K4
PH: (819) 821-9230 FX: (819) 569-5928

TITLE: INSWING SINGLE GLAZED STEEL DOOR (HVHZ) (IMPACT)

BILL OF MATERIAL

PREPARED BY: BUILDING DROPS, INC.
1900 NE MIAMI COURT, STE 2-15
MIAMI, FL 33132
PH: (954)399-8478
FAX: (954)744.4738
WEB: www.buildingdrops.com
BUILDING DROPS

REMARKS	BY	DATE

THE INSTALLATION DETAILS DESCRIBED HEREIN ARE GENERIC AND MAY NOT REFLECT ACTUAL CONDITIONS FOR A SPECIFIC SITE. IF SITE CONDITIONS CAUSE INSTALLATION TO DEVIATE FROM THE REQUIREMENTS DETAILED HEREIN, A LICENSED ENGINEER OR ARCHITECT SHALL PREPARE SITE SPECIFIC DOCUMENTS FOR USE WITH THIS DOCUMENT.

HERMES F. NORERO LICENSE No. 73778 STATE OF FLORIDA PROFESSIONAL ENGINEER

HERMES F. NORERO, P.E.
PRESIDENT & MANAGER
BUILDING DROPS, INC
1900 NE MIAMI COURT # 2-15
MIAMI, FL 33132
FBPE CERT. OF AUTHORIZATION No. 29578

FL46851

DATE: 06.20.24

DWG. BY: DI

CHK. BY: HFN

SCALE: NTS

DWG. #: DLF005

SHEET: 16 OF 16

6/21/2024 4:04 PM
c:\users\dylanwata\building drops, inc\building drops landing - common\projects\de la fontaine\fbc-22-0614.1 - fbc submittal - hollow metal swing door ts-os\dwgs\inswing glazed\dlf005.dwg